USER'S MANUAL

NKP 125 A21 V.2
NKP 150 A21 V.2
NKP 160 A21 V.2
NKP 200 A21 V.2
NKP 250 A21 V.2
NKP 315 A21 V.2

NKD 125 A21 V.2
NKD 150 A21 V.2
NKD 160 A21 V.2
NKD 200 A21 V.2
NKD 250 A21 V.2
NKD 315 A21 V.2

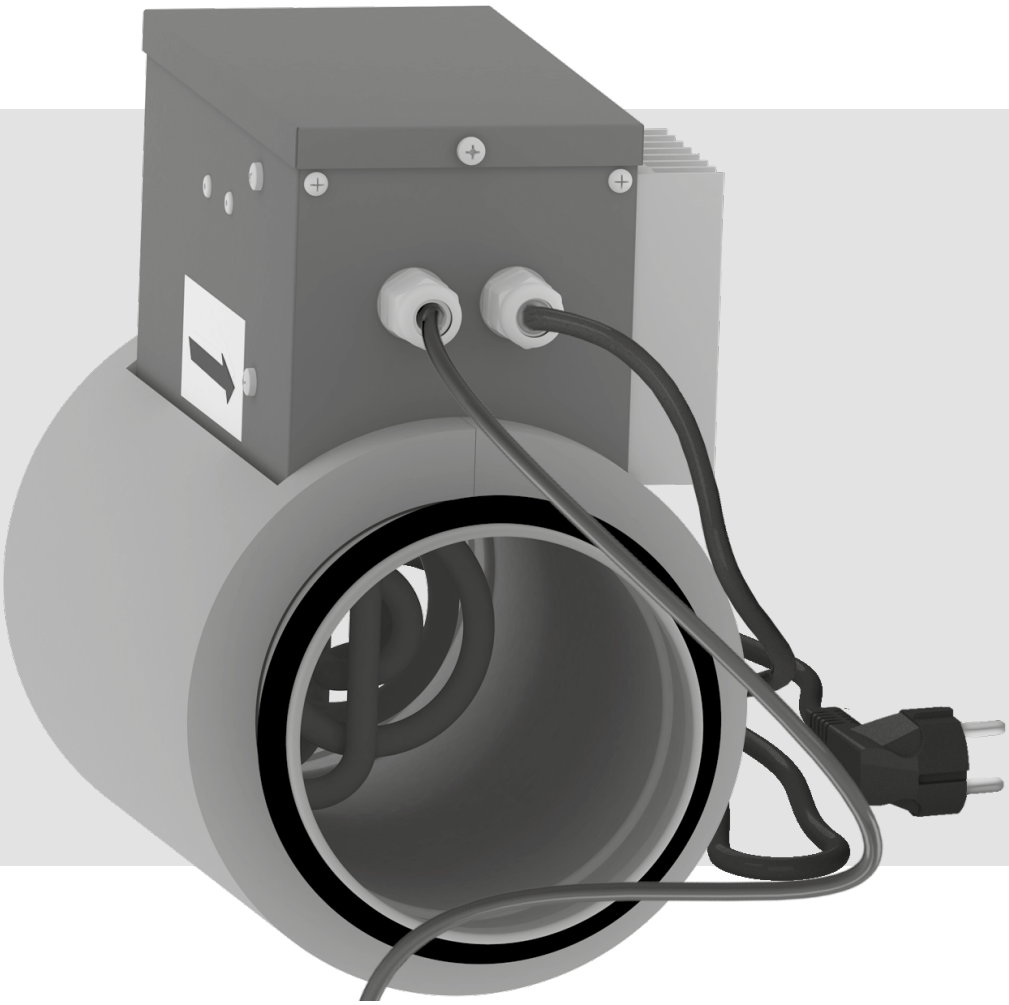

Duct heater

CONTENTS

Safety requirements 2
Purpose 4
Delivery set 4
Designation key 4
Technical data 4
Design and operating principle 5
Mounting and set-up 6
Connection to power mains 7
Technical maintenance 8
Troubleshooting 8
Storage and transportation regulations 9
Manufacturer's warranty 10
Certificate of acceptance 11
Seller information 11
Installation certificate 11
Warranty card 11

This user's manual is a main operating document intended for technical, maintenance, and operating staff.
The manual contains information about purpose, technical details, operating principle, design, and installation of the NKP/NKD A21 V.2 unit and all its modifications.
Technical and maintenance staff must have theoretical and practical training in the field of ventilation systems and should be able to work in accordance with workplace safety rules as well as construction norms and standards applicable in the territory of the country.

SAFETY REQUIREMENTS

All user's manual requirements as well as the provisions of all the applicable local and national construction, electrical, and technical norms and standards must be observed when installing and operating the unit.
Disconnect the fan from power supply prior to any connection, servicing and repair operations.
Only qualified electricians with a work permit for electrical units up to 1000 V are allowed for installation and The present user's manual should be carefully read before beginning works.
Check the unit for any visible damages of the casing before starting installation. The casing internals must be free of any foreign objects.
While mounting the unit, avoid compression of the casing!
Misuse of the unit and any unauthorized modifications are not allowed.
Do not expose the unit to adverse atmospheric agents (rain, sun, etc.).
Transported air must not contain any dust or other solid impurities, sticky substances, or fibrous materials.
Do not use the unit in a hazardous or explosive environment containing spirits, gasoline, insecticides, etc.
Do not close or block the intake or extract vents in order to ensure the efficient air flow.
Do not sit on the unit and do not put objects on it.
The information in this user's manual was correct at the time of the document's preparation. The Company reserves the right to modify the technical characteristics, design, or configuration of its products at any time in order to incorporate the latest technological developments.
Do not touch the unit with wet or damp hands.
Do not touch the unit when barefoot.

This unit is not intended for use by persons (including children) with reduced physical, sensory or mental capabilities, or lack of experience and knowledge, unless they have been given supervision or instruction concerning use of the unit by a person responsible for their safety. Children should be supervised to ensure that they do not play with the unit.

If the supply cord is damaged, it must be replaced by the manufacturer, its service agent, or similarly qualified persons in order to avoid a safety hazard.

CAUTION: In order to avoid a safety hazard due to inadvertent resetting of the thermal cut-out, this appliance must not be supplied through an external switching device, such as a timer, or connected to a circuit that is regularly switched on and off by the utility.

THE PRODUCT MUST BE DISPOSED SEPARATELY AT THE END OF ITS SERVICE LIFE.
DO NOT DISPOSE THE UNIT AS UNSORTED DOMESTIC WASTE.

PURPOSE

The heater is designed for integration into a ventilation system and joint operation with an air handling unit equipped with a control system used to switch on the heater and control its operation.

DELIVERY SET

Name	Number
Heater	1
Duct temperature sensor (only for the NKD model)	1
User's manual	1
Packing box	1

DESIGNATION KEY

NKD 125 1,2 1 A21 V.2

Options
A21 V.2: compatible with A21 automation without DB-9M connector
Phases
1: single-phase
Heater power [kW]
Air duct diameter [mm]
Unit type
NKD: duct reheater
NKP: duct preheater

TECHNICAL DATA

The heater is rated for indoor application with the ambient temperature ranging from -30 °C up to +40 °C and relative humidity up to 80 %.
The heater is rated for connection to single-phase AC 230 V/50 (60) Hz.
The recommended minimum air flow speed in the air duct is 1.5 m/s.
The heater is rated as a class I electric appliance.
Hazardous parts access and water ingress protection rating is IP40
The heater design is constantly being improved, thus some models may be slightly different from those described in this manual.

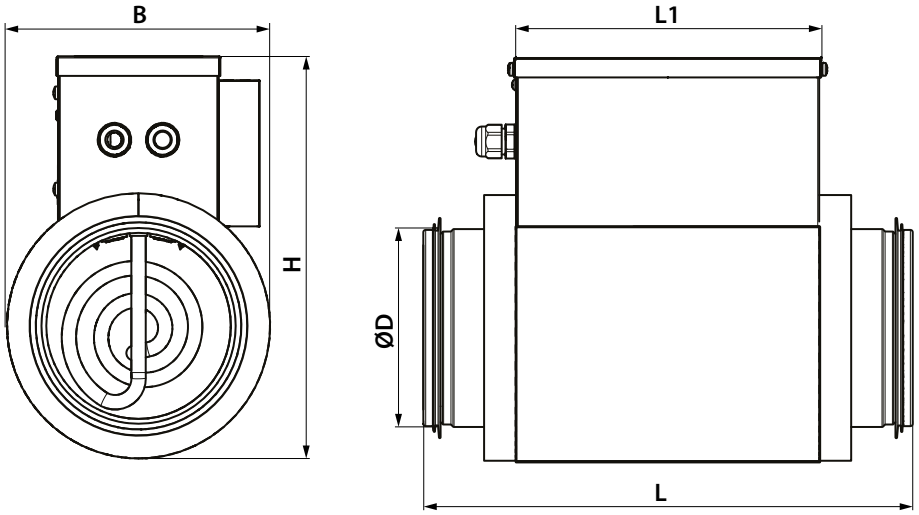

Model	Technical data			Dimensions [mm]				
	Minimum air flow [m³/h]	Power consumption of electric heating elements [kW]	Current [A]	Ø D	B	H	L	L1
NKP/NKD 125-0,6-1	60	0.6	2.6	125	164	249	306	192
NKP/NKD 125-0,8-1	80	0.8	3.5					
NKP/NKD 125-1,2-1	90	1.2	5.2					
NKP/NKD 150-0,8-1	80	0.8	3.5	150	189	280	306	192
NKP/NKD 150-1,2-1	90	1.2	5.2					
NKP/NKD 150-1,7-1	160	1.7	7.4					
NKP/NKD 150-2,0-1	170	2.0	8.7					
NKP/NKD 160-0,8-1	80	0.8	3.5	160	197	291	306	192
NKP/NKD 160-1,2-1	150	1.2	5.2					
NKP/NKD 160-1,7-1	160	1.7	7.4					
NKP/NKD 160-2,0-1	170	2.0	8.7					
NKP/NKD 200-1,2-1	150	1.2	5.2	200	239	336	306	192
NKP/NKD 200-1,7-1	160	1.7	7.4					
NKP/NKD 200-2,0-1	170	2.0	8.7					
NKP/NKD 250-1,2-1	180	1.2	5.2	250	287	388	307	192
NKP/NKD 250-2,0-1	200	2.0	8.7					
NKP/NKD 250-3,0-1	375	3.0	13.0					
NKP/NKD 315-2,0-1	220	2.0	8.7	315	353	454	306	192
NKP/NKD 315-3,0-1	320	3.0	13.0					

DESIGN AND OPERATING PRINCIPLE

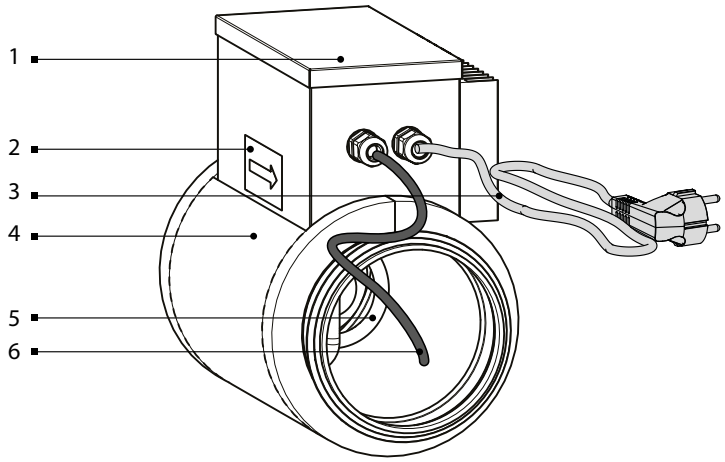

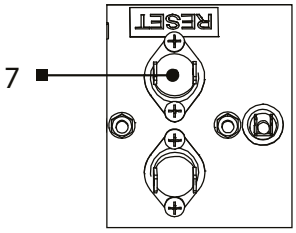

1: control unit cover
2: air flow direction indicator
3: power cable
4: thermal insulation (20 mm mineral wool)
5: electric heating element
6: connection cable to the unit
7: thermal contact reset button

The reheater (NKD) maintains the supply air temperature (on the room side) at the level set by the unit controller.
The preheater (NKP) maintains the air temperature in the intake duct (street side) at a level that prevents the heat exchanger from freezing.
The heater has two built-in thermal contacts for overheating protection: TK60 with an actuation temperature of +60 °C with an automatic restart and TK90 with an actuation temperature of +90 °C with a manual restart.
To restart the TK90 thermal contact, remove the control unit cover and press the button on the thermal contact.

MOUNTING AND SET-UP

READ THE USER'S MANUAL BEFORE INSTALLING THE UNIT.

Attach the NKD heater to the air duct connected to the supply air spigot.
Attach the NKP heater to the air duct connected to the intake air spigot.
The heater is mounted horizontally or vertically.

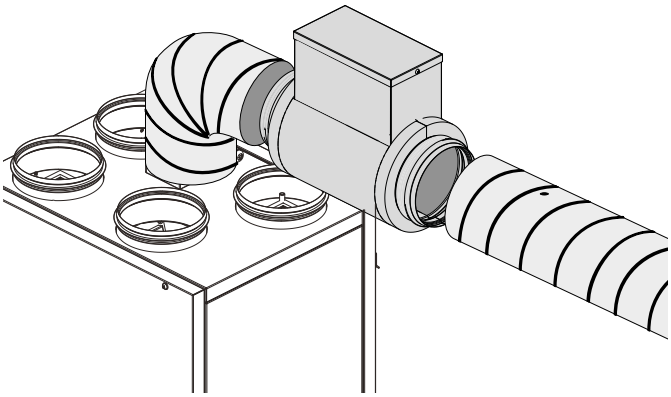

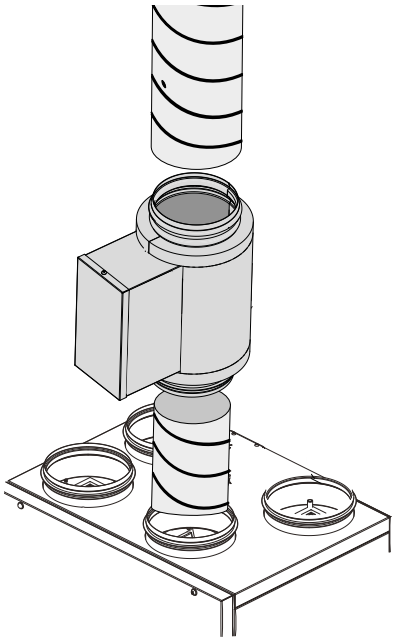

Push the air ducts onto the flanges until stop. Flexible ducts must be fixed rigidly with a metal worming clamp.

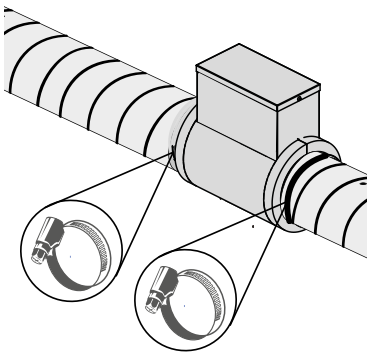

In the horizontal position, the heater must be installed with the cover facing upwards. A max. deviation of 90° is allowed. The heater must not be positioned with the cover facing downwards.

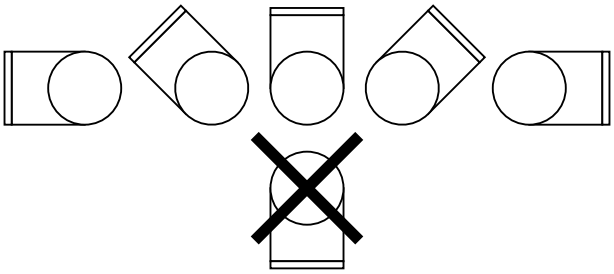

A duct temperature sensor must be installed for the NKD heater.
Install the sensor in the supply duct downstream of the heater.

Warning! The sensor must be mounted at the distance of min 1 m from the heater.

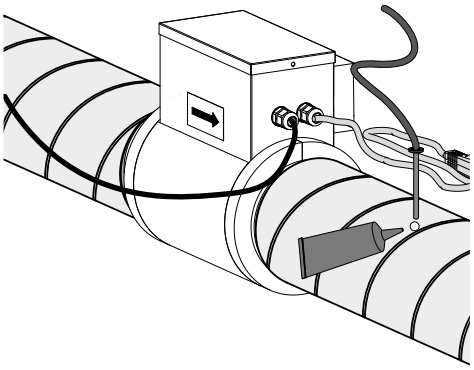

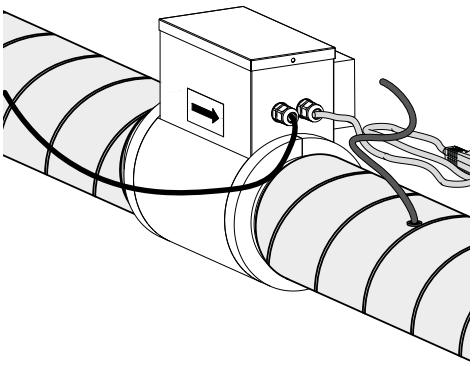

Ensure air duct tightness at the sensor mounting location.

CONNECTION TO POWER MAINS

POWER OFF THE POWER SUPPLY PRIOR TO ANY OPERATIONS WITH THE UNIT.
THE UNIT MUST BE CONNECTED TO POWER SUPPLY BY A QUALIFIED ELECTRICIAN.
THE RATED ELECTRICAL PARAMETERS OF THE UNIT ARE GIVEN ON THE MANUFACTURER'S LABEL.

ANY TAMPERING WITH THE INTERNAL CONNECTIONS IS PROHIBITED AND WILL VOID THE WARRANTY.

Connect the heater to the unit with the cable installed by the manufacturer, following the wiring diagram in the installation's user manual.

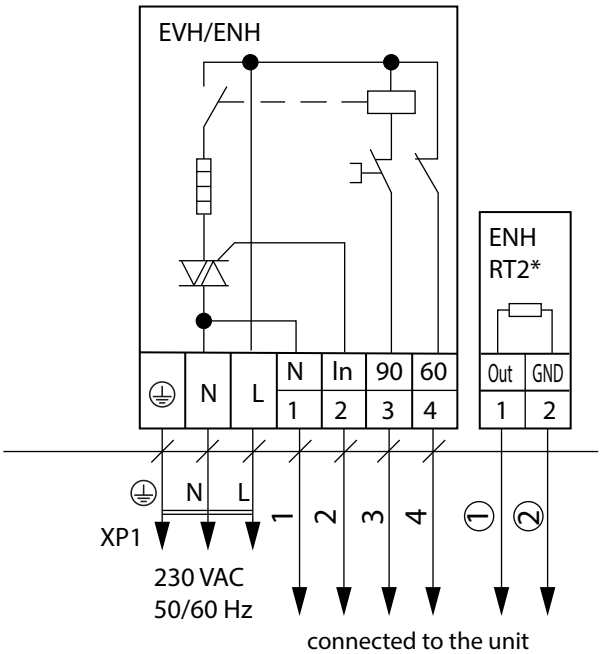

Designation	Name
EVH	Duct preheater
ENH	Duct reheater
ENH RT2*	Duct temperature sensor
XP1	Power cord plug

*Part of the ENH kit.

— – **Electric shock hazard!**

1 – blue
2 – black
3 – grey
4 – brown

① — brown ② — white.

For the NKD heater, connect a duct temperature sensor to the unit.
Connect the heater to AC single-phase 230 V/50 (60) Hz power mains using a pre-wired power cable with a plug.

TECHNICAL MAINTENANCE

The heater should be inspected periodically for mechanical damage, checking that the seals are tight and that the ducts are securely fastened to the heater.
Heater maintenance includes:

- Inspection of tightening of ground screw clamps and electric connections.
- Inspection of the wire terminal connections.

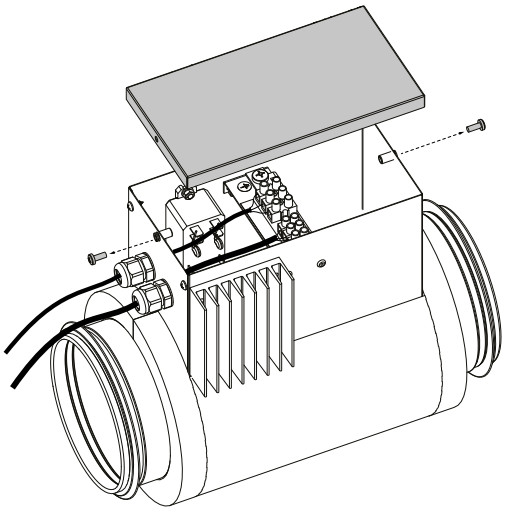

- Cleaning of the electric heating elements of dust and dirt. To clean the heating elements, it is necessary to disconnect the air ducts from the heater.

TROUBLESHOOTING

IF UNIDENTIFIED NOISES OR ODOURS SHOULD ARISE AND IN CASE OF DEFORMATION OF ELEMENTS OR VIBRATION, IMMEDIATELY DISCONNECT THE UNIT FROM POWER SUPPLY AND CONTACT THE SELLER FOR DIAGNOSTICS AND TO DETERMINE THE CAUSE OF THE FAULT.

DIAGNOSTICS MUST BE CARRIED OUT BY QUALIFIED SPECIALISTS.

Possible faults and troubleshooting

Problem	Possible reasons	Troubleshooting
The heater does not work.	No power supply.	Connect the heater to power mains.
	The heater is not connected to the unit.	Check that the heater is correctly connected to the unit.
	No heater in the unit configuration.	Check the unit configuration.
Smoke, burning smell.	Heating elements clogged.	Clean heating elements from contaminants.

If troubleshooting steps have failed, contact the Seller of the product.

In case of faults not described in the table, contact the Seller for further information.

STORAGE AND TRANSPORTATION REGULATIONS

- Store the unit in the manufacturer's original packaging box in a dry closed ventilated premise with temperature range from +5 ˚C to +40 ˚C and relative humidity up to 70 %.
- Storage environment must not contain aggressive vapors and chemical mixtures provoking corrosion, insulation, and sealing deformation.
- Use suitable hoist machinery for handling and storage operations to prevent possible damage to the unit.
- Follow the handling requirements applicable for the particular type of cargo.
- The unit can be carried in the original packaging by any mode of transport provided proper protection against precipitation and mechanical damage. The unit must be transported only in the working position.
- Avoid sharp blows, scratches, or rough handling during loading and unloading.
- Prior to the initial power-up after transportation at low temperatures, allow the unit to warm up at operating temperature for at least 3-4 hours.

MANUFACTURER'S WARRANTY

The product is in compliance with EU norms and standards on low voltage guidelines and electromagnetic compatibility. We hereby declare that the product complies with the provisions of Electromagnetic Compatibility (EMC) Directive 2014/30/EU of the European Parliament and of the Council, Low Voltage Directive (LVD) 2014/35/EU of the European Parliament and of the Council and CE-marking Council Directive 93/68/EEC. This certificate is issued following test carried out on samples of the product referred to above.
The manufacturer hereby warrants normal operation of the unit for 24 months after the retail sale date provided the user's observance of the transportation, storage, installation, and operation regulations. Should any malfunctions occur in the course of the unit operation through the Manufacturer's fault during the guaranteed period of operation, the user is entitled to get all the faults eliminated by the manufacturer by means of warranty repair at the factory free of charge. The warranty repair includes work specific to elimination of faults in the unit operation to ensure its intended use by the user within the guaranteed period of operation. The faults are eliminated by means of replacement or repair of the unit components or a specific part of such unit component.

The warranty repair does not include:
- routine technical maintenance
- unit installation/dismantling
- unit setup

To benefit from warranty repair, the user must provide the unit, the user's manual with the purchase date stamp, and the payment paperwork certifying the purchase. The unit model must comply with the one stated in the user's manual. Contact the Seller for warranty service.

The manufacturer's warranty does not apply to the following cases:
- User's failure to submit the unit with the entire delivery package as stated in the user's manual including submission with missing component parts previously dismounted by the user.
- Mismatch of the unit model and the brand name with the information stated on the unit packaging and in the user's manual.
- User's failure to ensure timely technical maintenance of the unit.
- External damage to the unit casing (excluding external modifications as required for installation) and internal components caused by the user.
- Redesign or engineering changes to the unit.
- Replacement and use of any assemblies, parts and components not approved by the manufacturer.
- Unit misuse.
- Violation of the unit installation regulations by the user.
- Violation of the unit control regulations by the user.
- Unit connection to power mains with a voltage different from the one stated in the user's manual.
- Unit breakdown due to voltage surges in power mains.
- Discretionary repair of the unit by the user.
- Unit repair by any persons without the manufacturer's authorization.
- Expiration of the unit warranty period.
- Violation of the unit transportation regulations by the user.
- Violation of the unit storage regulations by the user.
- Wrongful actions against the unit committed by third parties.
- Unit breakdown due to circumstances of insuperable force (fire, flood, earthquake, war, hostilities of any kind, blockades).
- Missing seals if provided by the user's manual.
- Failure to submit the user's manual with the unit purchase date stamp.
- Missing payment paperwork certifying the unit purchase.

FOLLOWING THE REGULATIONS STIPULATED HEREIN WILL ENSURE A LONG AND TROUBLE-FREE OPERATION OF THE UNIT.

USER'S WARRANTY CLAIMS SHALL BE SUBJECT TO REVIEW ONLY UPON PRESENTATION OF THE UNIT, THE PAYMENT DOCUMENT AND THE USER'S MANUAL WITH THE PURCHASE DATE STAMP.

CERTIFICATE OF ACCEPTANCE

Unit Type	Duct heater
Model	NK_____
Serial Number	
Manufacture Date	
Quality Inspector's Stamp	

SELLER INFORMATION

Seller	
Address	
Phone Number	
E-mail	
Purchase Date	
This is to certify acceptance of the complete unit delivery with the user's manual. The warranty terms are acknowledged and accepted.	
Customer's Signature	

Seller's Stamp

INSTALLATION CERTIFICATE

The NK_____ unit is installed pursuant to the requirements stated in the present user's manual.	
Company name	
Address	
Phone Number	
Installation Technician's Full Name	
Installation Date:	**Signature:**
The unit has been installed in accordance with the provisions of all the applicable local and national construction, electrical and technical codes and standards. The unit operates normally as intended by the manufacturer.	
Signature:	

Installation Stamp

WARRANTY CARD

Unit Type	Duct heater
Model	NK_____
Serial Number	
Manufacture Date	
Purchase Date	
Warranty Period	
Seller	

Seller's Stamp